Compact hydraulic power pack type MPN

Compact hydraulic power packs are a type of hydraulic power pack. They are characterised by a highly compact design, since the motor shaft of the electric motor also acts as the pump shaft.
The ready-for-connection compact hydraulic power pack type MPN and MPNW includes an electric drive which runs in oil. The stator is securely attached to the housing (tank). The compact hydraulic power pack is suitable for hydraulic systems with operating mode S2, S3 or S6. The heat is dissipated via surface convection so that no external cooler is usually necessary.
The type MPN contains a 3-phase motor, the type MPNW contains a single-phase-motor. Different tank sizes enable different usable oil quantities. Either single-circuit systems or dual-circuit systems can be selected. A radial piston pump , an external gear pump or internal gear pump can be used as a hydraulic pump.
The compact hydraulic power pack type MPN and MPNW is suitable as a highly compact control system, since connection blocks and valve banks can be directly mounted.

Nomen-clature:	Radial piston and/or gear pump with integrated motor single or dual-circuit pump
Design:	Oil immersed hydraulic power pack for intermittent or load/no load operation (S2-/S3-/S6-service)
p_{max}:	Radial piston pump 700 bar (high pressure), gear pump 220 bar (low pressure)
Q_{max}:	12.4 lpm (high pressure) (V_g = 9.17 cm³/rev) 83 lpm (low pressure) (V_g = 61 cm³/rev)
$V_{t\ max}$:	100 l

Features and benefits:

- Intermittent or load/no load operation (S2-/S3-/S6-service)
- Long lifetime and excellent reliability achieved by using radial piston pumps
- Low oil fill volumes make it environmentally sound thanks to small cost of disposal and low costs for hydraulic fluid
- Two-stage valves and switch units for press control systems can be directly flange mounted
- Co-ordinated range of valves and accessories from modular system
- Dual-circuit pumps available

Intended applications:

- Brake and rotor adjustment modules on wind turbines
- Counterbalance as well as machine tools
- Presses and other shaping machines
- Handling and clamping systems on machine tools and fixtures
- Lubrication systems

Design and order coding example

MPN 44	- H 1,5	- B10.20	D	- ...	- 3 ~ 230V 50 Hz

Motor voltage 3 ~ 230/400V Δγ 50 Hz, 3 ~ 500V γ 50 Hz,
1 ~ 230V 50 Hz, 1 ~ 110V 60 Hz (single-phase-motor)

Valve mounting

Additional options
- Level gauge
- Level switch
- Temperature switch
- Various means of electrical connection

Design
- For installation in self-made oil tanks: as single pump or cover plate version
- With tank, usable volume V_{usable} 10 l to 75 l

Pump version

Single-circuit pump
- Radial piston pump H or gear pump Z
- Internal gear pump IZ

Dual-circuit pump
- Combinations:
  - Radial piston pump - radial piston pump (HH)
  - Radial piston pump - gear pump (HZ)

Basic type, size Type MPN (3-phase motor) and MPNW (single-phase motor)
Depending on the size, single-phase motor has 30 to 50% less power

Function

Single stage pump
(radial piston pump, gear pump)

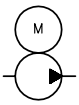

Installation pump

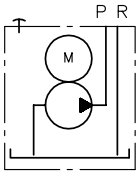

Hydraulic power pack (incl. tank)

Dual stage pump
(radial piston/gear pump,
gear pump/gear pump)

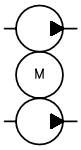

Installation pump

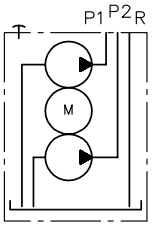

Hydraulic power pack (incl. tank)

Circuit example:

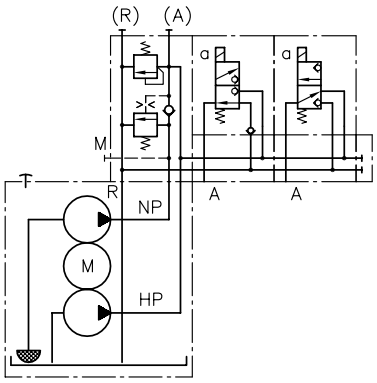

 © HAWE Hydraulik SE

General parameters and dimensions

Single-circuit pump, dual-circuit pump
(without tank)

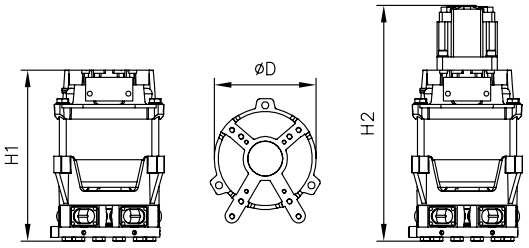

Compact hydraulic power pack
(tank with mounted valves)

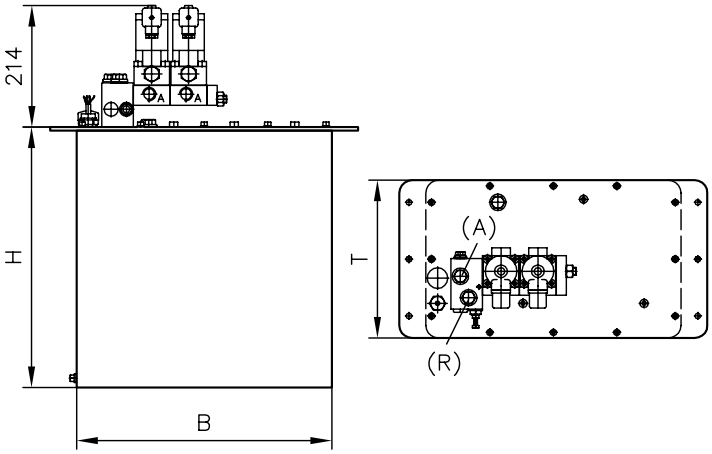

	Radial piston pump (3 cyl.)			Gear pump					Dimensions [mm]		
	Max. pressure	Delivery flow		Max. pressure	Delivery flow						
	p_{max} [bar]	Q_{pu} [lpm] 50 Hz	Q_{pu} [lpm] 60 Hz	p_{max} [bar]	Q_{pu} [lpm] 50 Hz	Q_{pu} [lpm] 60 Hz	P_N [kW]1)	m [kg]2)	H1 2)	$H2_{max}$	ÆD
MPN 42	700 - 250	2,39 - 7,33	2,87 - 8,8	200 - 60	8,46 - 30,02	10,2 - 36,02	2,1	12,9	251/258	431	
MPN 44	700 - 250	1,53 - 5,37	1,84 - 6,44	200 - 55	5,37 - 25,99	6,4 - 31,19	2,1				
MPN 46	700 - 250	3,16 - 11,12	3,8 - 13,34	200 - 40	12,41 - 71,73	14,89 - 86,08	3,0	18,5	274/281	454	165
MPN 48	700 - 330	2,36 - 4,06	2,83 - 4,87	220 - 60	4,16 - 34,91	4,99 - 41,89	3,0				
MPN 404	700 - 340	3,1 - 3,49	3,7 - 4,19	220 - 45	2,7 - 68,16	2,25 - 81,79	4,2	26,4	298/313	486	

1) The actual power consumption is dependent on the respective operation pressure and can be up to 1.5xP_N
2) Values apply to radial piston pump/gear pump versions

Version with tank:

Size	Tank size	H [mm]	W [mm]	D [mm]
MPN 4.	B 25	458	402	250
	B 55	470	560	350
	B 110	495	560	350
	B 25 L	283	623	250
	B 55 L	305	560	350

Circuit example:

MPN 44-Z 8.8-B 10 KT

-AS 1 F 3/160
-BA 2
-NBVP 16 G/R-GM/NZP 16 LZY 5/50-G 8 MA/GM/3-X 84 V-DG 5E-250-1/4
-NBVP 16 G-GM/NZP 16 LZY 5/50-G 8 MA/GM/3-X 84 V-DG 62
-1-G 24
-X 84 V-9/250
-3 x 400/230 V 50 Hz

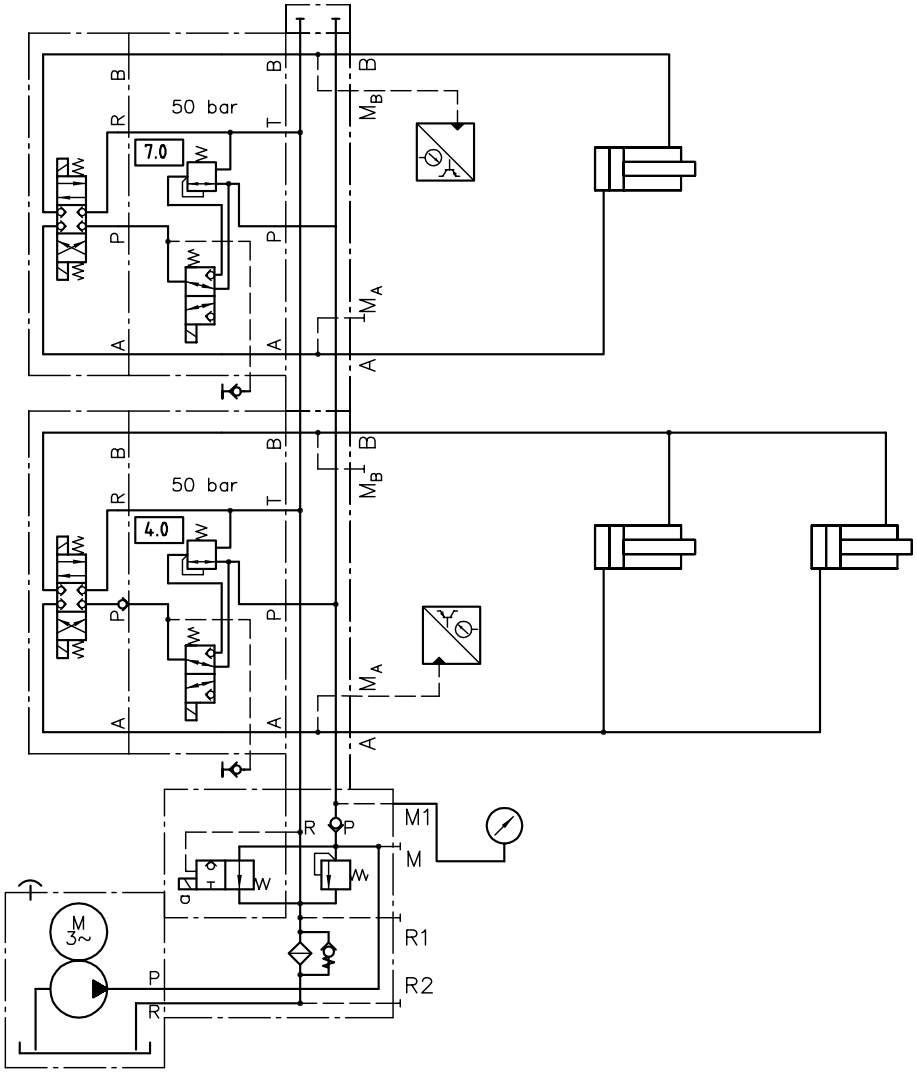

Associated technical data sheets:

- Compact hydraulic power pack type MPN and MPNW: D 7207

Connection blocks:

- Type A, B and C: D 6905 A/1, D 6905 B, D 6905 C

Flange-mountable valve banks:

- Valve bank (directional seated valve) type VB: D 7302
- Valve bank (directional seated valve) type BWN and BWH: D 7470 B/1
- Valve bank (nominal size 6) type BA: D 7788
- Valve bank (directional seated valve) type BVH: D 7788 BV

HAWE Hydraulik SE | Streitfeldstraße 25 | Postfach 80 08 04 | 81608 München | Germany | Tel +49 89 379100-1000
Fax +49 89 379100-91000 | info@hawe.de | www.hawe.com